NOTE: SOME PARTS MAY VARY DEPENDING ON PUMP MODEL.

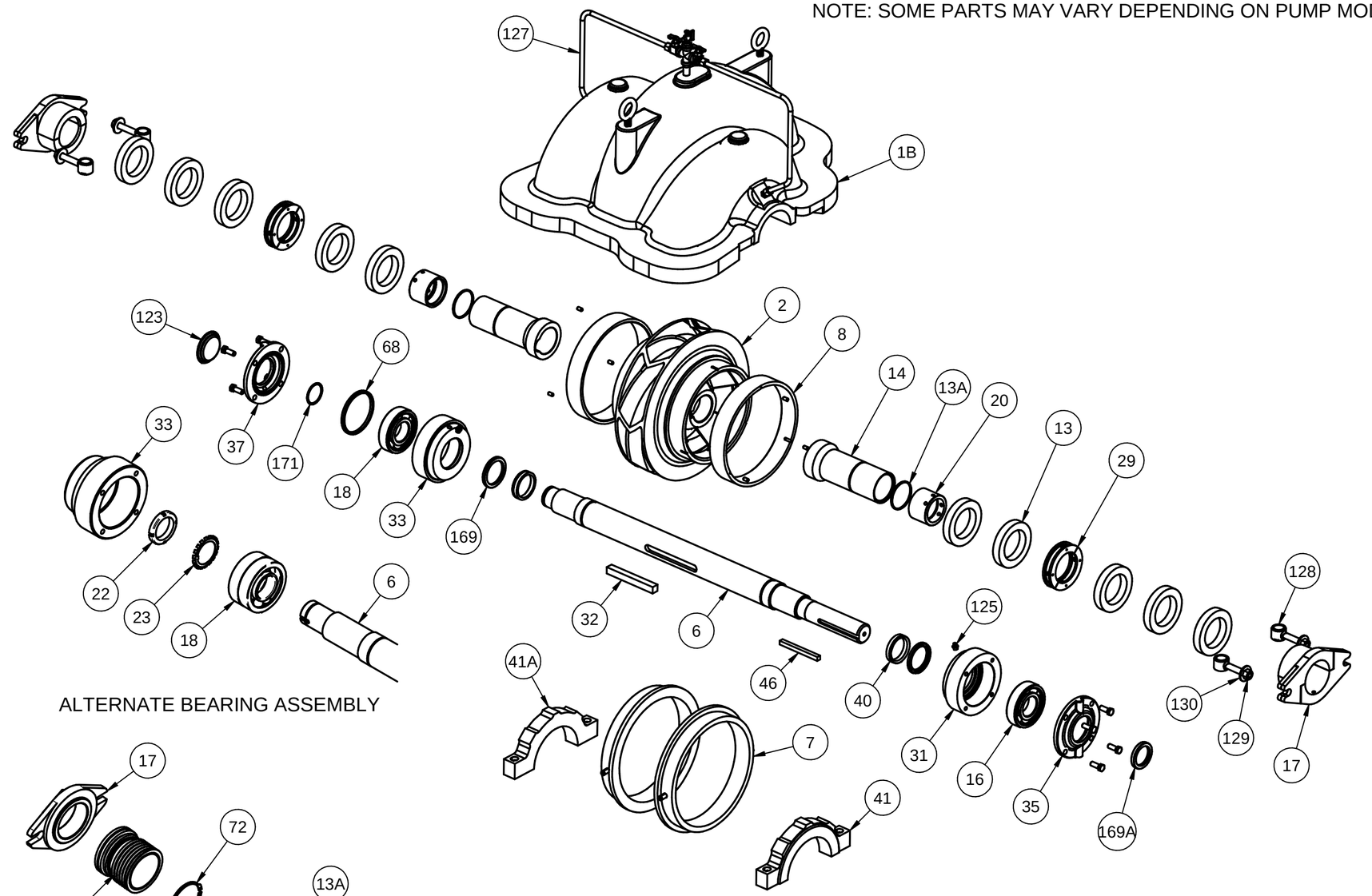

ALTERNATE BEARING ASSEMBLY

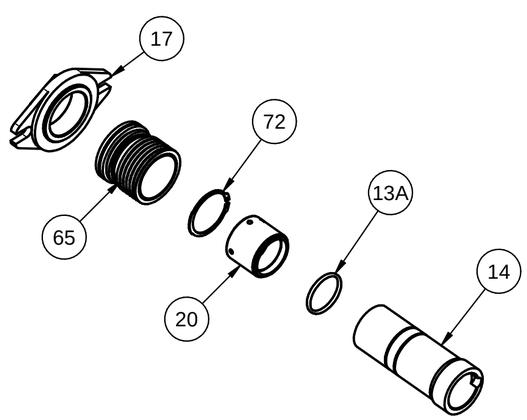

ALTERNATE MECHANICAL SEAL ASSEMBLY

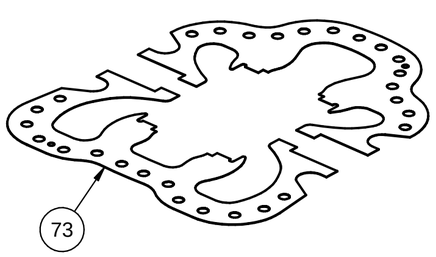

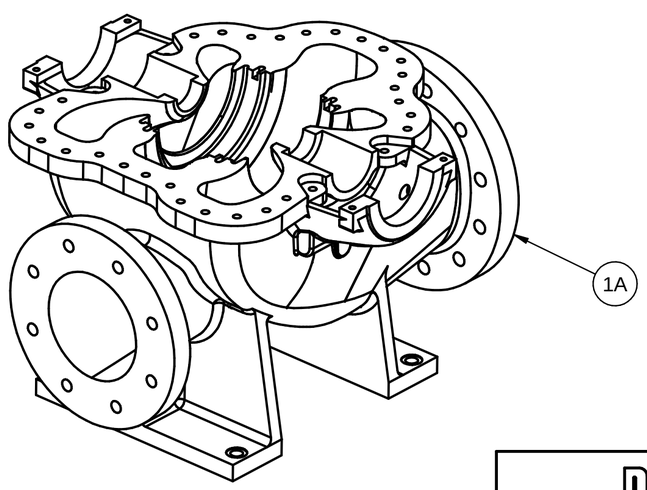

ITEM	DESCRIPTION	QTY.
1A	LOWER HALF CASING	1
1B	UPPER HALF CASING	1
2	IMPELLER	1
6	SHAFT	1
7	CASE RING	2
8	IMPELLER RING - OPTIONAL	2
13	PACKING	
13A	O-RING	2
14	SHAFT SLEEVE	2
16	INBOARD BEARING (RADIAL)	1
17	GLAND	2
18	OUTBOARD BEARING (THRUST)	2
20	SLEEVE NUT	2
29	LANTERN RING	2
31	INBOARD BEARING HOUSING	1
32	IMPELLER KEY	1
33	OUTBOARD BEARING HOUSING	1
35	INBOARD BEARING COVER	1
37	OUTBOARD BEARING COVER	1
40	DEFLECTOR	2
41	INBOARD BEARING CAP	1
41A	OUTBOARD BEARING CAP	1
46	COUPLING KEY	1
68	SHOULDER RING	2
73	CASE GASKET	1
123	END CAP	1
125	GREASE FITTING	2
127	SEAL WATER PIPING	1
128	GLAND BOLT	4
129	GLAND BOLT NUT	4
130	GLAND BOLT WASHER	4
169A	BEARING SEAL - OUTER	1
169	BEARING SEAL - INNER	2
171	BEARING RETAINING RING	1

ALTERNATE BEARING ASSEMBLY		
ITEM	DESCRIPTION	QTY.
6	SHAFT	1
18	OUTBOARD BEARING (THRUST)	2
22	BEARING LOCKNUT	1
23	BEARING LOCKWASHER	1
33	OUTBOARD BEARING HOUSING	1

ALTERNATE MECHANICAL SEAL ASSEMBLY		
ITEM	DESCRIPTION	QTY.
13A	O-RING	2
14	SHAFT SLEEVE	2
17	GLAND	2
20	SLEEVE NUT	2
65	MECHANICAL SEAL	2
72	SNAP RING	2

PATTERSON PUMP COMPANY
A GORMAN-RUPP COMPANY

EXPLODED PUMP ASSEMBLY
FOR A
SPLIT-CASE PUMP

DWG. NO.	REV.
C02-145856	0

DRAWN	DATE
mcaudell	MAY 16, 2017

SCALE	APPRVD.	SHEET OF
NONE	BG	1 1